USER MANUAL | EN

MATRIX and MATRIX RT

Online Double Conversion UPS

1:1 **3:1**

6-10 kVA
Singlephase / Singlephase

10 kVA
Threephase / Singlephase



Accedi al link ed utilizza la password per scaricare il manuale in Italiano

Access the link and use the password to download the manual in English

Accédez au lien et utilisez le mot de passe pour télécharger le manuel en Français

Acceda al enlace y utilice la contraseña para descargar el manual en Español

Rufen Sie den Link auf und verwenden Sie das Passwort, um das Handbuch auf Deutsch herunterzuladen

http://gtec-power.eu/en/matrix-user-manual/

PASSWORD: GTCMTX11022

Manufacturer:
G-Tec Europe S.r.l
Strada Marosticana 81/13 36031 Dueville (VI) Italy
www.gtec-power.eu

Authorised representative in the UK:
HEALTH & SAFETY PROJECT ENGINEERING LTD
Office: 47 Newtown Road, CM23 3SB Bishop's Stortford, Hertfordshire,
https://www.hseproject.co.uk

Eng. Ivano Manfrin
UK Authorised Representative
United Kingdom
C.N. 10535785

Service and support:
Call your local service representative

Service Agency	
Name	
Phone number	
Mail	

Legend

- **RT** Short form for Matrix RT Rrack/Tower model
- **-KS** suffix in the product code**:** Identified the UPS model for log autonomy, in these models batteries are external
- **EBM** Battery cabinet
- **RT EBM** Battery cabinet for RT model
- **Tower EMB** Battery cabinet for Tower model
- **MBP** Maintenance Bypass module

UPS DESCRIPTIONS

Static converter providing an uninterruptible source of energy**.**

SAFETY and ENVIRONMENT INSTRUCTIONS

SAVE THESE INSTRUCTIONS. This manual contains important instructions that should be followed during installation and maintenance of the UPS and batteries.

The UPS that are covered in this manual are intended for installation in an environment within 0 to 50°C, free of conductive contaminant.

Certification standards EU	Certification standards UK
• Safety: EN IEC 62040-1	• BS EN IEC 62040-1: + A11:2021, Safety
• EMC: EN IEC 62040-2	• BS EN IEC 62040-2, EMC
• ROHS EN IEC 63000:2018	• BS EN IEC 63000:2018, ROHS

Special symbols



RISK OF ELECTRIC SHOCK - Observe the warning associated with the risk of electric shock symbol.



Important instructions that must always be followed.



EU separate collection and lead content mark for lead acid batteries. Indicates that the battery must not be disposed of to the normal household waste but be separately collected and recycled.



EU separate collection mark for waste electrical and electronic equipment (WEEE). Indicates that the item must not be disposed of to the normal household waste but be separately collected and recycled.



Information, advice, help.



Refer to the user manual.

Safety of persons

- RISK OF VOLTAGE BACKFEED. The system has its own power source (the battery). Isolate the UPS and check for hazardous voltage upstream and downstream during lockout-tagout operation. Terminal blocks may be energized even if the system is disconnected from the AC power source.
- Dangerous voltage levels are present within the system. It should be opened exclusively by qualified service personnel.
- The system must be properly grounded.
- The battery supplied with the system contains small amounts of toxic materials. To avoid accidents, the directives listed below must be observed:
  - Servicing of batteries should be performed or supervised by personnel knowledgeable about batteries and the required precautions.
  - When replacing batteries, replace with the same type and number of batteries or battery packs.
  - Do not dispose of batteries in a fire. The batteries may explode.
  - Batteries constitute a danger (electrical shock, burns). The short-circuit current may be very high.
- Precautions must be taken for all handling:
  - Wear rubber gloves and boots/shoes.
  - Do not lay tools or metal parts on top of batteries.
  - Disconnect charging source prior to connecting or disconnecting battery terminals.
  - Determine if battery is inadvertently grounded. If inadvertently grounded, remove source from ground. Contact with any part of a grounded battery can result in electrical shock. The likelihood of such shock can be reduced if such grounds are removed during installation and maintenance (applicable to equipment and remote battery supplies not having a grounded supply circuit).

Product safety

- The UPS connection instructions and operation described in the manual must be followed in the indicated order.
- UPS enclosure IP rating IP20.
- UPS is an indoor use equipment
- CAUTION - To reduce the risk of fire, the unit connects only to a circuit provided with branch circuit overcurrent protection.
- The upstream circuit breaker for Normal AC/Bypass AC must be easily accessible. The unit can be disconnected from AC power source by opening this circuit breaker.
- An additional AC contactor is used for back feed protection and must comply with IEC/EN 62040-1 (the creepage and clearance distances shall meet the basic insulation requirements for pollution degree 2).
- Disconnection and overcurrent protection devices shall be provided by others for permanently connected AC input (Normal AC/Bypass AC) and AC output circuits.
- Check that the indications on the rating plate correspond to your AC powered system and to the actual electrical consumption of all the equipment to be connected to the system.
- For PLUGGABLE EQUIPMENT, the socket-outlet shall be installed near the equipment and shall be easily accessible
- Never install the system near liquids or in an excessively damp environment.
- Never let a foreign body penetrate inside the system.
- Never block the ventilation grates of the system.
- Never expose the system to direct sunlight or source of heat.
- If the system must be stored prior to installation, storage must be in a dry place.
- The admissible storage temperature range is -25°C to +55°C without battery (-15°C to +40°C with battery).
- TN-S /TN-C/TT of electrical supply system may be connected by UPS.
- This UPS may be provided with a maximum of 6 extension battery cabinets or equivalent.

Special precautions

- The unit is heavy: wear safety shoes and use vacuum lifter preferentially for handling operations.
- All handling operations will require at least two people (unpacking, lifting, installation in rack system).
- Before and after the installation, if the UPS remains de-energized for a long period, the UPS must be energized for a period of 24 hours, at least once every 6 months (for a normal storage temperature less than 25°C). This charges the battery, thus avoiding possible irreversible damage.
- For three-phase AC input installation, this equipment complies with IEC 61000-3-12 provided that the short-circuit power Ssc is greater than or equal to 3.63MW at the interface point between the user's supply and the public system. It is the responsibility of the installer or user of the equipment to ensure, by consultation with the distribution network operator if necessary, that the equipment is connected only to a supply with a short-circuit power Ssc greater than or equal to 3.63MW.
- During the replacement of the Battery Module, it is imperative to use the same type and number of elements as the original Battery Module provided with the UPS to maintain an identical level of performance and safety.
- This is a category C3 UPS product. In a residential environment, this product may cause radio interference, in which case the user may be required to take additional measures.

CONTENTS

1. **Introduction** **1**
   1.1 Product Features 1
   1.2 Environmental protection 2
2. Product Overview **3**
   2.1 Model list 3
   2.2 Presentation 5
3. Installation **10**
   3.1 Unpacking and Inspecting 10
   3.2 Checking the accessory kit 12
   3.3 Mechanical Install 13
   3.4 Power cables connection 20
4. Parallel system Installation and Operation (Optional) **27**
   4.1 Wiring for AC Cable 27
   4.2 Wiring for parallel signal cable 31
   4.3 Parallel system Operation 31
5. Operation **32**
   5.1 LCD panel 32
   5.2 LCD description 34
   5.3 Display functions 35
   5.4 User settings 36
   5.5 Starting the UPS with utility 37
   5.6 Starting the UPS on Battery 37
   5.7 UPS Shutdown 38
6. Communication **39**
   6.1 RS232 and USB 39
   6.2 UPS remote control functions 39
   6.3 IoT APP Gtec Explore 40
   6.4 Modbus TCP 41
   6.5 Intelligent Card (optional) 41
   6.6 UPS Management Software 41
7. UPS maintenance **43**
   7.1 Equipment care 43
   7.2 Transporting the UPS 43
   7.3 Storing the equipment 43
   7.4 Recycle 44
8. Troubleshooting **45**
   8.1 Typical alarms and faults 45
   8.2 Silencing the alarm 47
9. Specifications **48**
   9.1 UPS Block Diagram 48
   9.2 UPS Specification 48

1. Introduction

Thank you for selecting our UPS to protect your electrical equipment.
We recommend that you take the time to read this manual to take full advantage of the many features of your UPS.
Before installing your UPS, please read the booklet presenting the safety instructions. Then follow the indications in this manual.

1.1 Product Features

The UPS protects your sensitive electronic equipment from the most common power problems, including power failures, power sags, power surges, brownouts, line noise, high voltage spikes, frequency variations, switching transients, and harmonic distortion.

Special characteristic:

- Double converter with pure sine waveform output
- Full digital control
- Output PF = 1
- High charger capability, the charger current is up to 12Amps
- Smart charging method to expand battery life time
- EBM quantity auto detection
- Communication ports: RPO, Dry in, Dry out, intelligent slot, USB, RS232
- IoT: Ethernet(default) and Wireless (optional)
- Dot-matrix LCD, it supports multi-language
- ECO Mode
- Start-able without battery
- Start from battery without input Mains

1.2 Environmental protection

Products are developed according to an eco-design approach.

Substances

This product does not contain CFCs, HCFCs or asbestos.

Packing

To improve waste treatment and facilitate recycling, separate the various packing components.

- The cardboard we use comprises over 50% of recycled cardboard.
- Sacks and bags are made of polyethylene.
- Packing materials are recyclable.
  Follow all local regulations for the disposal of packing materials.

ATTENTIONS:

Use cut protection gloves to remove the packaging

Product

The product is mainly made up of recyclable materials.

Average design product life: Single phase UPS (excluding batteries) products have an average useful product life of 5-8 years

Dismantling and disassembly must take place in compliance with all local regulations concerning waste. At the end of its service life, the product must be transported to recycling centers, re-use and treatment facilities for waste electrical and electronic equipment (WEEE).

Battery

The product contains lead-acid batteries that must be processed according to applicable local regulations concerning batteries.

The battery may be removed to comply with regulations and in view of correct disposal.

ATTENTIONS:

Use chemical protection gloves to manage batteries

Use safety shoes and dress

2. Product Overview

2.1 Model list

1. 'xxK' models means 'standard models' with batteries, 'xxK-KS' models means 'long backup models' with bigger charger and external battery.
2. 16 or 20 batteries could be selected for UPS and EBM (External Battery Module).
3. The weight in the table below is reference only, please see the labels on the carton for details.
4. Dimension 'D' is chassis only, not including panel.

- Tower model:

Product	Description	Net Weights (kg)	Unit Size (W x H x D)(mm)
UPS(1-1) model	Tower 6K-KS 16	13,5	225*353,2*416
	Tower 6K-KS 20 (Std configuration)		
	Tower 10K-KS 16	15,5	
	Tower 10K-KS 20 (Std configuration)		
	Tower 6K 16	49,5	225*589*416
	Tower 6K 20 (Std configuration)	57,9	
	Tower 10K 16	59	
	Tower 10K 20 (Std configuration)	68,2	
UPS(3-1) model	Tower 3-1 10K 16	59,5	
	Tower 3-1 10K 20 (Std configuration)	68,7	
	Tower 3-1 10K-KS 16	22,7	
	Tower 3-1 10K-KS 20 (Std configuration)		
EBM	Tower EBM (2) 192 9AH	94,5	
	Tower EBM (2) 240 9AH (Std)	115,6	

- RT model:

Product	Description	Net Weights (kg) UPS + EBM	Unit Size (W x H x D)(mm)
UPS(1-1) Model	RT 6K-KS 16 (Std configuration)	13,6 + ----	UPS only 438*86,3(2U)*540
	RT 6K-KS 20		
	RT 10K-KS 16	15,5 + ----	
	RT 10K-KS 20 (Std configuration)		
	RT 6K 16 (Std configuration)	59,4 (13,3+46,1)	UPS + 1 EBM 438*215(5U)*559
	RT 6K 20	65,1 (13,3+51,8)	
	RT 10K 16	67,0 (15,2+51,8)	

Product	Description	Net Weights (kg) UPS + EBM	Unit Size (W x H x D)(mm)
	RT 10K 20 (**Std** configuration)	75,7 (15,2+60,5)	
UPS(3-1) model	RT 3-1 10K-KS 16	15,8 + ---	UPS only 438*86,3(2U)*540 UPS + 1 EBM 438*215(5U)*559
	RT 3-1 10K-KS 20 (Std configuration)		
	RT 3-1 10K 16	67,3 (15,5+51,8)	
	RT 3-1 10K 20 (Std configuration)	76,0 (15,5+60,5)	
EBM	RT EBM 192 9AH (2)	51,8	438*129(3U)*559
	RT EBM 240 9AH (1)	60,5	
	RT EBM 192 7AH (2)	46,1	
	RT EBM 240 7AH (1)	56,1	

(1) For RT 10kVA std UPS.

(2) For RT 6kVA std UPS

- Optional module or accessory:

If order other type function module or accessories, please contact distributors/agents.

Type	Description	Remark
RT MBP	RT 6K/10K MBP	For RT 1-1 models only
	RT 3-1 10K MBP	For RT 3-1 models only
Intelligent Card	Dry Contact card (AS400N)	See in chapter 6.5
	NMC card	
	MODBUS card (CMC)	
EMP	Temperature and humidity sensors	
COMM Cable	RS232 Cable	For RS232 communication
Parallel Kit	For parallel system installing	See in chapter 4.0
Battery cable	Battery cable (16 batt.) for UPS connect with user's own EBM	1,8m length, see in chapter 3.4.3
	Battery cable (20 batt.) for UPS connect with user's own EBM	
Rail kit	Rail kit for RT model in Rack installing	See in chapter 3.3.2
Gland kit	Gland kit for RT 1-1 model	For RT 1-1 UPS/MBP model
	Gland kit for Tower 1-1 model	For Tower 1-1 UPS model
	Gland kit for all 3-1 model	For all 3-1 UPS/MBP model

2.2 Presentation

2.2.1 Tower model:

- UPS module:

Front view

1. Ventilation area
2. LCD Module, including:

   2(1)---Button,

   2(2)---LCD screen,

   2(3)---LED indicator

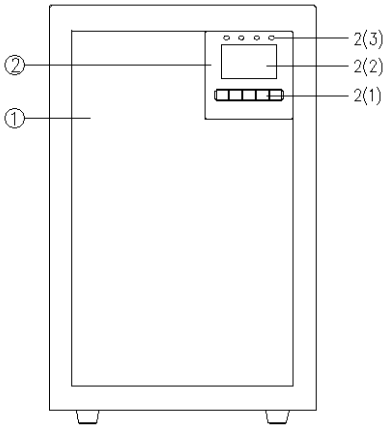

Tower UPS
6~10K-KS(1-1)

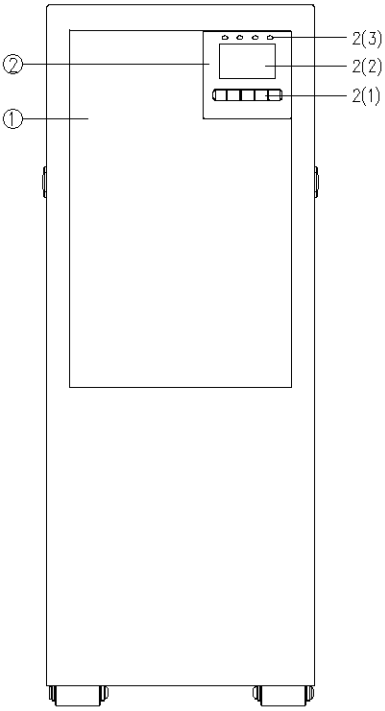

Tower UPS
6~10K(1-1) / 10K-31-KS

Rear view

1. SLOT for optional Card
2. RS232 Port
3. Ethernet port (RJ45, for IoT function)
4. USB Port
5. HDMI for Wireless (for IoT function)
6. EPO & DRY in/out
7. Parallel port Optional
8. RJ45 (for EBM detect)
9. Input / Output Terminal Block
10. Input switch
11. External battery connector
12. Maintenance bypass switch

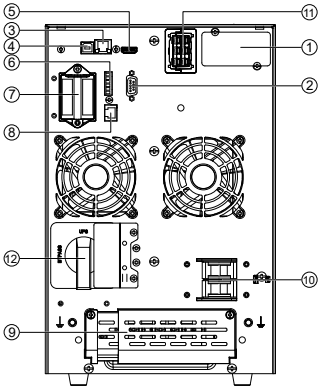

6K-KS(1-1)

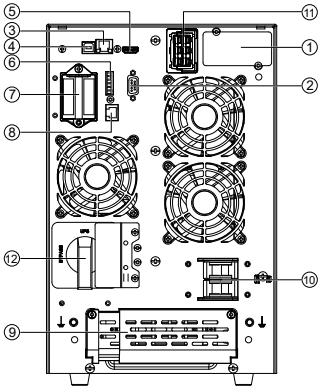

10K-KS(1-1)

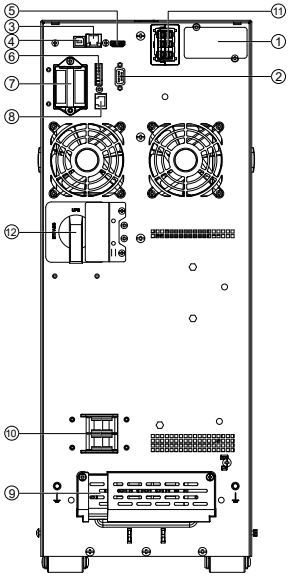

6K

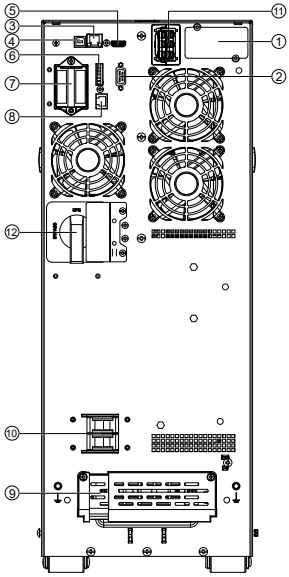

10K(1-1)

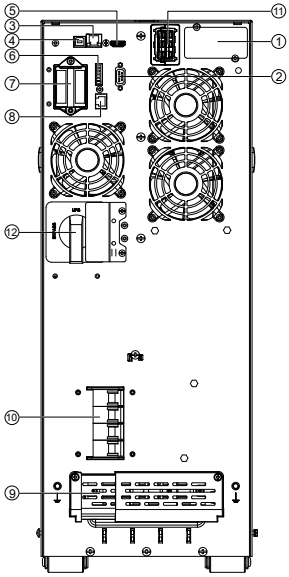

10K/10K-KS(3-1)

- **EBM (External Battery Module):**

Front view

1. Ventilation area
2. EBM label

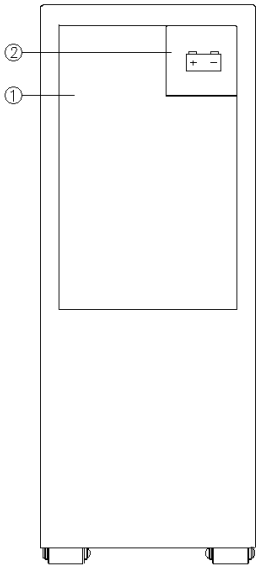

Rear view

1. EBM connector 1
2. EBM connector 2
3. Fuse board cover (replace EBM fuse)
4. EBM detection Box (RJ45 port)

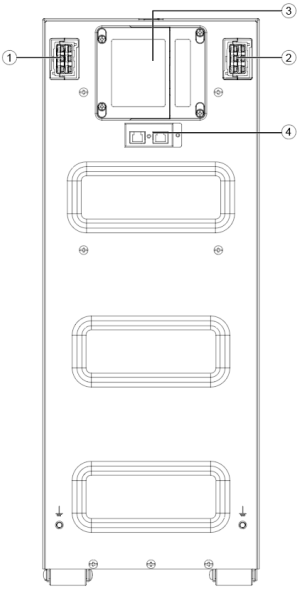

2.2.2 RT model:

- UPS Module

Front view

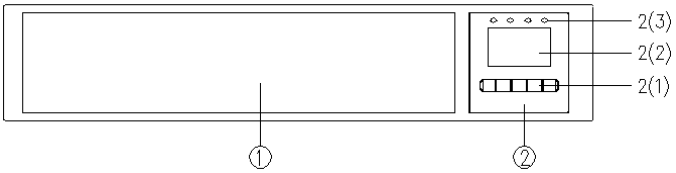

1. Ventilation area
2. LCD Module, including: 2(1)---Button， 2(2)---LCD screen， 2(3)---LED indicator

Rear view

1. SLOT for optional Card
2. RS232 Port
3. Ethernet port (RJ45, for IoT function)
4. USB Port
5. HDMI for Wireless opt. (for IoT function)
6. EPO & DRY in/out
7. Parallel port (optional)
8. RJ45 (for EBM detect/RT MBP detect)
9. Input /Output Terminal Block
10. Metal Cover (do not open)
11. External battery connector

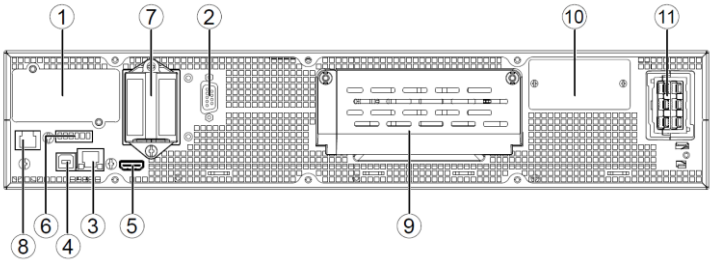

UPS (1-1)

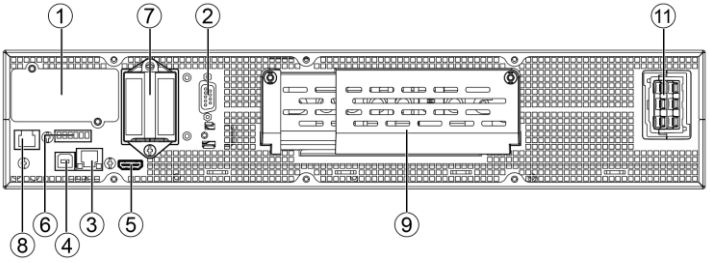

UPS (3-1)

- EBM(External Battery Module):

Front view

1. EBM Ventilation area
2. EBM label

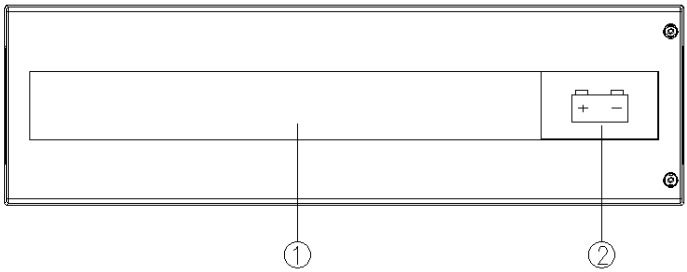

Rear view

1. Fuse board cover (replace EBM fuse)
2. EBM connector 1
3. EBM connector 2
4. EBM detection connectors (RJ45 port)

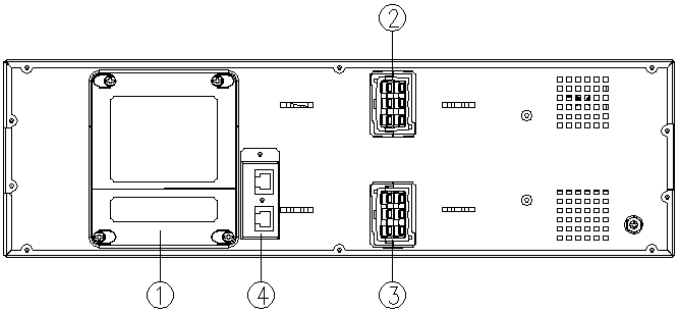

3. Installation

It is recommended to move the equipment to the installation site by using a pallet jack or a truck before unpacking.

The system may be installed only by qualified electricians in accordance with applicable safety regulations.

Some of cabinet is heavy, please install it with at least two peoples.

3.1 Unpacking and Inspecting

⚠ Unpacking the unit in a low-temperature environment may cause condensation occurred in and on the cabinet. Do not install the unit until the inside and outside of the unit are absolutely dry (hazard of electric shock).

If any equipment has been damaged during shipment, keep the shipping cartons and packing materials for the carrier or place of purchase and file a claim for shipping damage. If you discover damage after acceptance, file a claim for concealed damage.

- Tower 6K-KS/10K-KS (1-1)

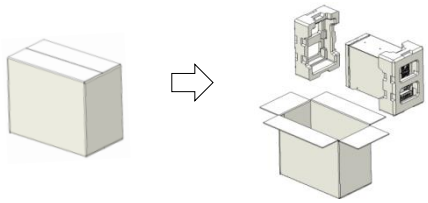

- Tower no pallet packaging 6K/10K (1-1) /10K(3-1) /10K-KS(3-1)

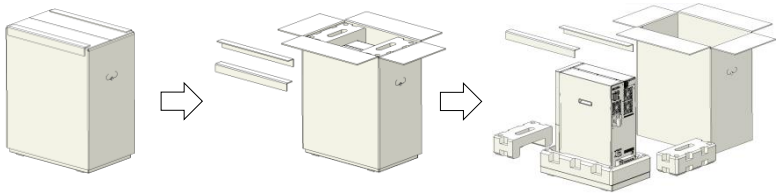

- Tower with pallet 6K/10K (1-1) /10K(3-1) /10K-KS(3-1) and EBM

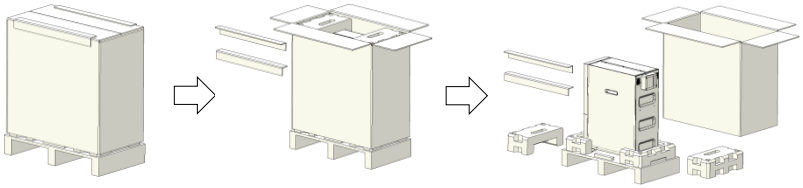

1) Use the forklift or pallet truck to move UPS
2) To remove the UPS from the pallet use a Fork lift

- RT UPS

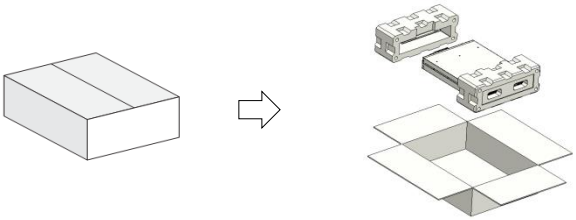

- RT EBM

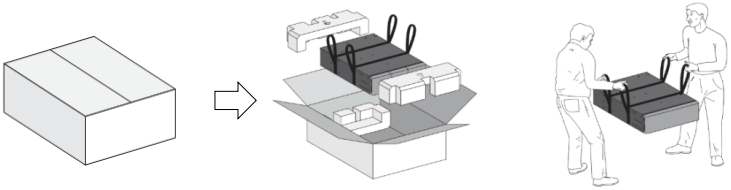

Note:
The cabinet is heavy, please see spec weight provided on the carton/label.
Do not lift the unit's front panel and rear panel.
Discard or recycle the packaging in a responsible manner, or store it for future use.

Packing materials must be disposed in compliance with all local regulations concerning waste.

Using the required PPE and tools, to protect from the follow risk, Cut, crushing, load handling

3.2 Checking the accessory kit

Verify that the following additional items are included with the unit.

Tower model:

	1-1 model		3-1 model		Tower EBM
	Tower UPS 6K/10K	Tower UPS 6K/10K -KS	Tower UPS 10K	Tower UPS 10K-KS	
Battery cable		O		O	√
EBM detection cable					√
Copper bus-bar			√	√	
USB cable	√	√	√	√	
RS232 cable	O	O	O	O	
Parallel Kit	O	O	O	O	
Tower foot	√	O	√	√	√
Quick start (EBM)					√
User manual (UPS)	√	√	√	√	

RT model

	1-1 model		3-1 model		RT EBM
	RT UPS 6K/10K	RT UPS 6K/10K -KS	RT UPS 10K	RT UPS 10K-KS	
Battery cable		O		O	√
EBM detection cable					√
Copper bus-bar			√	√	
USB cable	√	√	√	√	
RS232 cable	O	O	O	O	
Parallel Kit	O	O	O	O	
Tower foot	√	√	√	√	
Extension plate of Tower foot					√
Rack ear	√	√	√	√	√
Rack rail kit	O	O	O	O	O
Quick start(EBM)					√
User manual(UPS)	√	√	√	√	

Note: √--- Standard configuration; O---Optional, default is Not configured;

3.3 Mechanical Install

3.3.1 Tower model

To keep air-flowing freely, it is recommended to keep a clearance with 500mm space both for front and rear side.

UPS model

1.Place the unit on a flat, stable surface in its final location,

2.Install 'tower foot' (if configured): remove side's screw from the unit, then install 'tower foot'.

3.Install the unit to ground(optional): place 4pcs bolts (M8 is recommended) to the final location previously, bolt's position please refer to below, then fix the unit to the bolts.

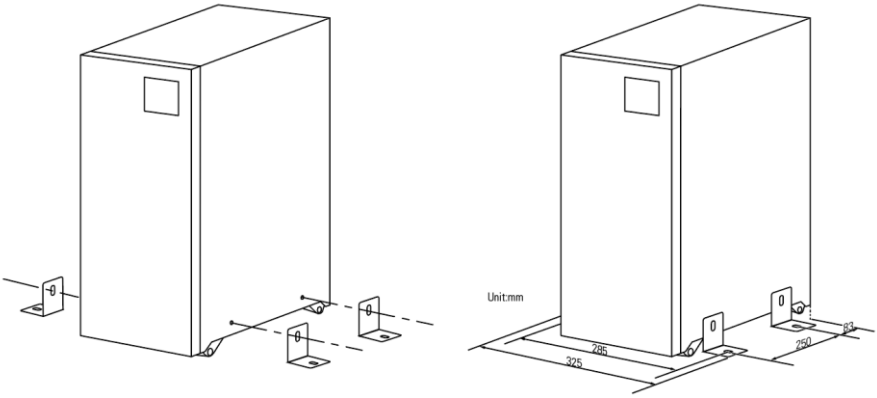

EBM model

EBM installation steps are the same as UPS as above.
It is recommended to place EBM module to UPS's left side.

3.3.2 RT model:

1. RT models support 2 installation modes: Rack installation and Tower installation.
2. To keep good ventilation, please keep a free-space (500mm at least) for front / rear panels of the module.
3. Do not carry the front/rear panel of the module during installing.

- **Rack installing**

  This procedure is suitable for 19 inch rack cabinet installation, it is recommended that the depth of the cabinet be no less than 800mm.

UPS model

Identify the final position and keep ‘2U’ space for this installing.

1. Install the rail kit (if configured). This rail kit is '2U & with screw holes (M5)'.

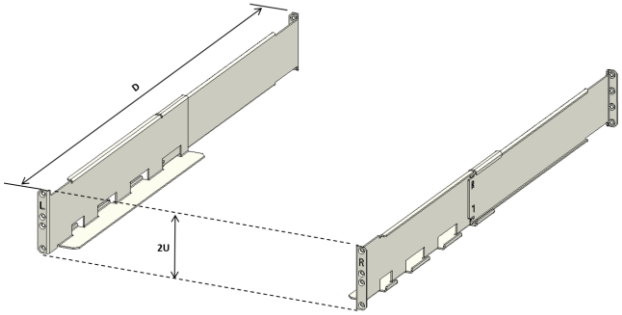

Fasten the rail kit to the cabinet with 8pcs M5 screws + washers (as below):

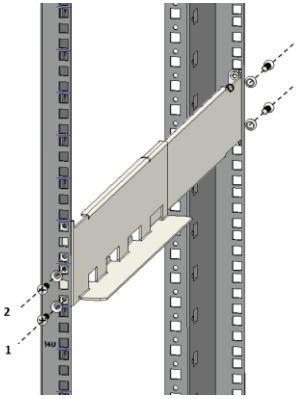

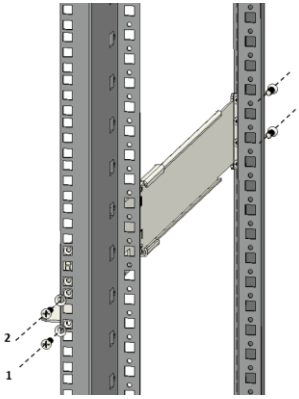

2. Install ‘Rack ear’ to the unit by the M4 screws(flat head).

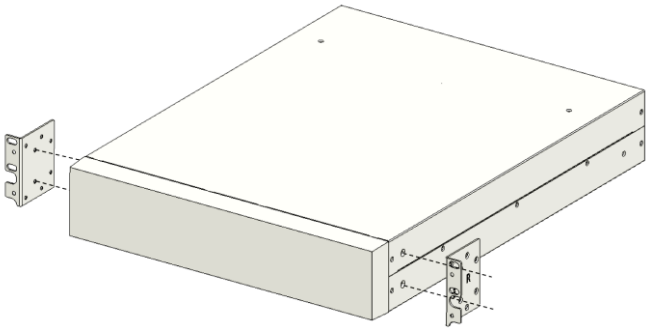

3. Slide the unit into ‘rail kit’ and make sure tighten the ‘rack mounting screw’.

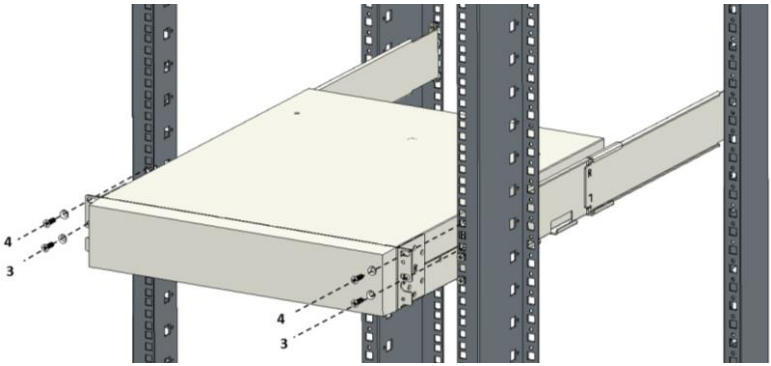

EBM model

Identify the final position and keep ‘3U’ space for this installing, and it is recommended to be installed below to UPS.

1. Install the rail kit (if configured): same as UPS as above.
2. Install ‘Rack ear’ to the unit by the M4 screws (flat head).

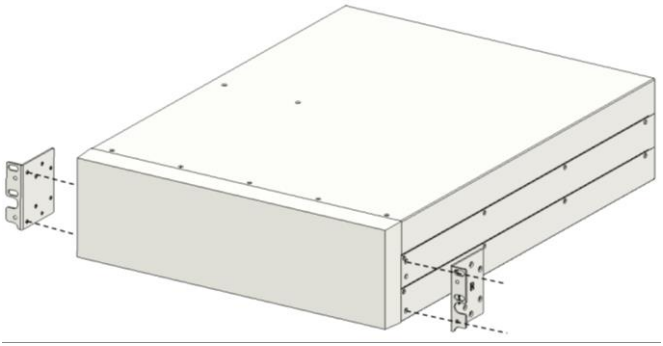

3. Slide the unit into ‘rail kit’ and make sure tighten the ‘rack mounting screw’.

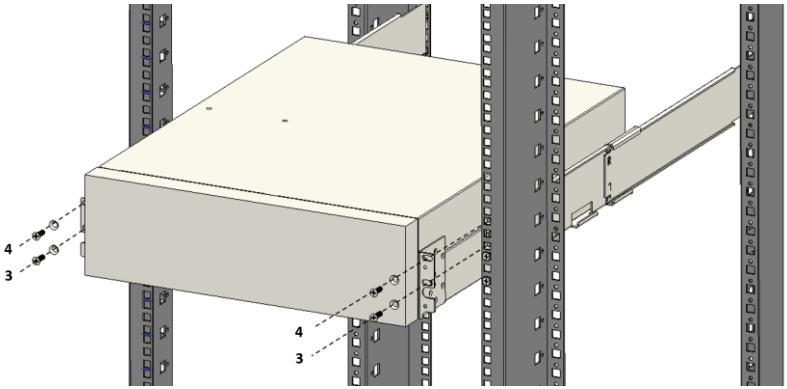

- **Tower installing**

UPS model

1. Rotate the LCD model to tower direction.

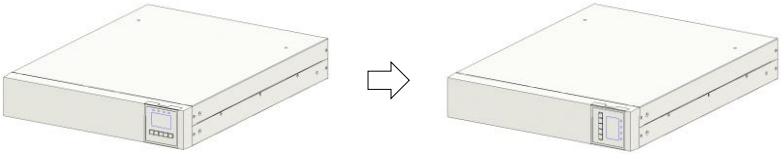

2. Set up the 'Tower foot', then take the unit into 'Tower foot'.

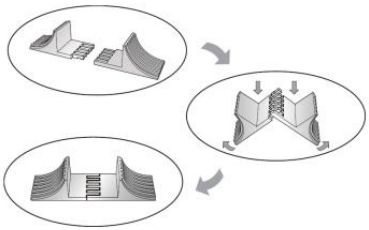

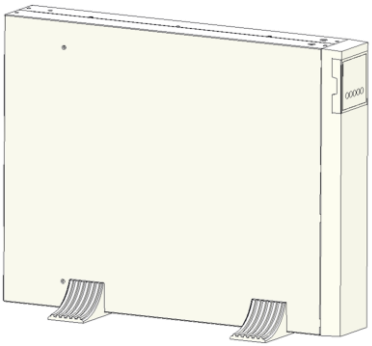

EBM model

1. Set up the 'Extension plate' as below and install to 'Tower foot' from UPS.
2. Take the UPS& EBM into 'Tower foot' individually: Place EBM module to UPS's right side and align with front-panel.

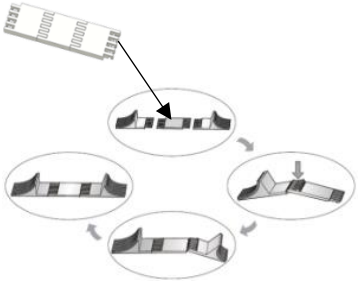

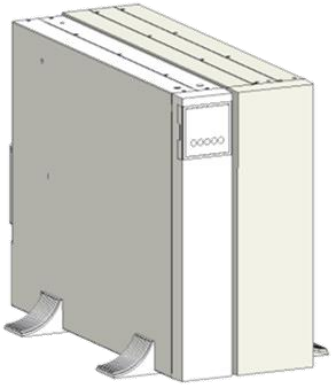



This type of operation must be carried out by qualified person.

Using the required PPE and tools, to protect from the follow risk, Cut, crushing, load handling

Rotate LCD for Tower installation

1. Pull out the LCD

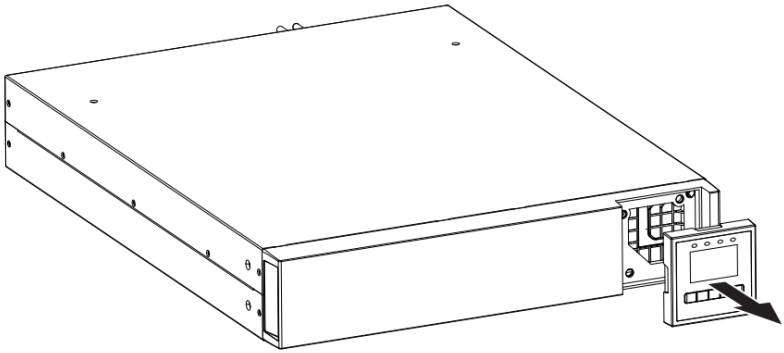

2. Rotate the LCD 90 degree

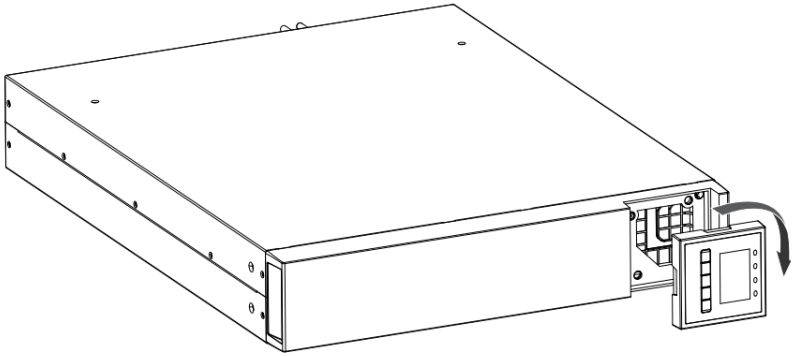

3. Insert LCD

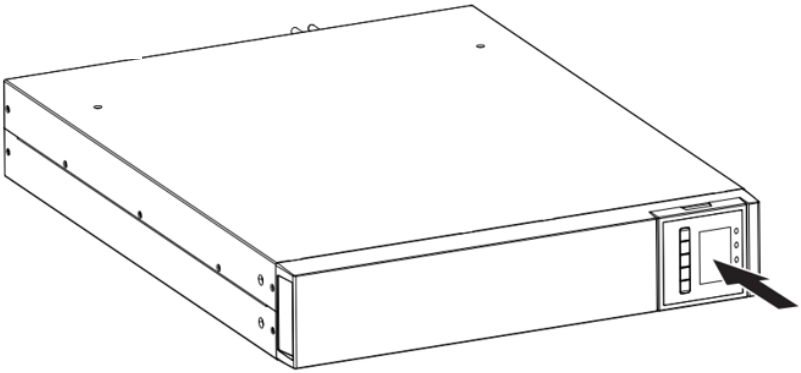

3.4 Power cables connection

This chapter introduces how to wiring AC IN/OUT cable to UPS in difference mode, and UPS connecting with EBM/MBP.

3.4.1 Input /Output wiring specifications

Before wring UPS, upstream breaker and backfeed contactor should be configured to avoid power backfeed to input. A “backfeed voltage danger” warning label should be added in backfeed contactor or device. Before operating, UPS input should cut off, and check all terminals voltage to avoid voltage dangerous. Backfeed contactor rating current should be larger than UPS rating input current.

Below figures show the wiring system of UPS input and output.

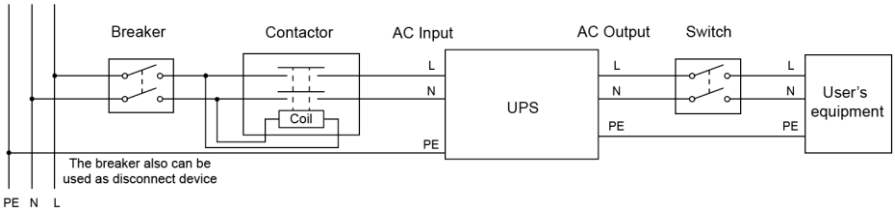

Single phase input system

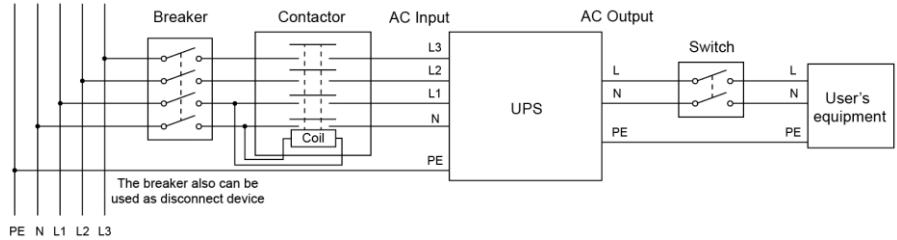

Three phase input system

Danger!
The rated current of the utility power input must be greater than the UPS input current, otherwise the utility power cable and device may be burnt!

Recommended upstream protection and downstream switch:

UPS power rating	Upstream circuit breaker	Backfeed contactor	Downstream switch
6000VA	D curve – 63A (1 phase)	63A (1 phase)	40A (1 phase)
10000VA	D curve – 80A (1 phase)	80A (1 phase)	63A (1 phase)
10000VA 3-1	D curve – 80A (3 phase)	80A (3 phase)	63A (1 phase)



Read the Safety instructions regarding back feed protection requirements.
Recommended cable minimum cross-sectional:

Model	6K(S) 1-1	10K(S) 1-1	10K(S) 3-1
Protective earthing conductor	10mm^2	10mm^2	10mm^2
Input L, N cable	6mm^2	10mm^2	10mm^2
Output L, N cable	6mm^2	10mm^2	10mm^2
Battery cable	6mm^2	10mm^2	10mm^2

The length of the output cable is recommended not to exceed 10 meters, otherwise, it may cause radio interference.

3.4.2 Wiring for AC Cable (AC source to UPS)

High leakage current:



Earth connection essential before connecting supply.



This type of connection must be carried out by qualified electrical person.
Before carrying out any connection, check that the upstream protection devices (Normal AC source and Bypass AC source) are open "O" (Off).
Always connect the ground wire first.

1. Remove the cover of terminal block.
2. Connect the AC cable to terminal blocks:



Using the required PPE and tools, to protect from the follow risk, Cut, crushing, load handling, electrical

- Tower UPS

1-1 model:

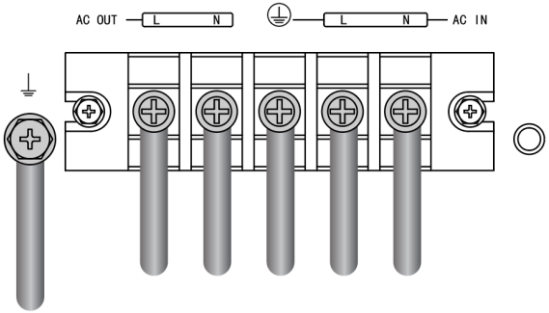

3-1 model:

This model support 2 modes setting as below, default is setting with 3-1 mode.

3-1 model use in 1-1

Short 'UPS input terminal L1/L2/L3' with 'busbar', then connect AC cable

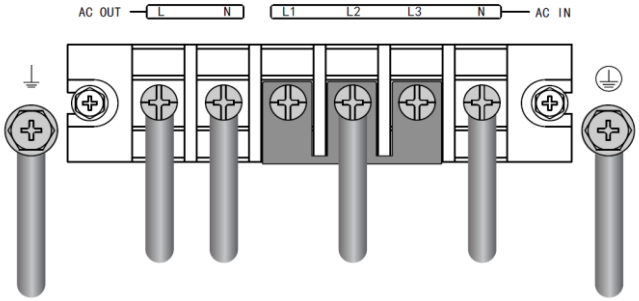

3-1 model use 3-1

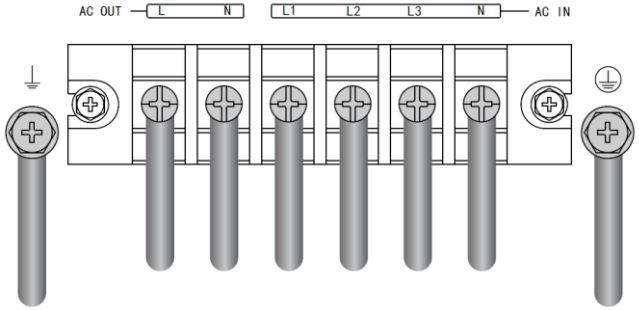

- RT UPS

1-1 model:

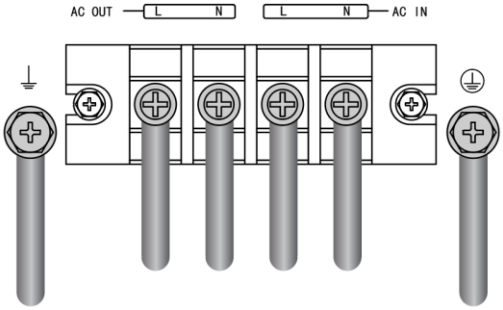

3-1 model:

This model support 2 modes setting as below, default is setting with 3-1 mode.

3-1 model use 1-1

Short 'UPS input terminal L1/L2/L3' with 'busbar', then connect AC cable

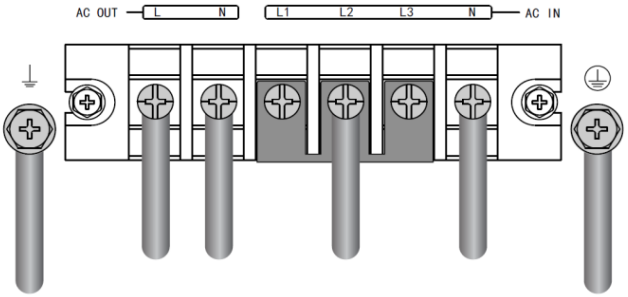

3-1 model

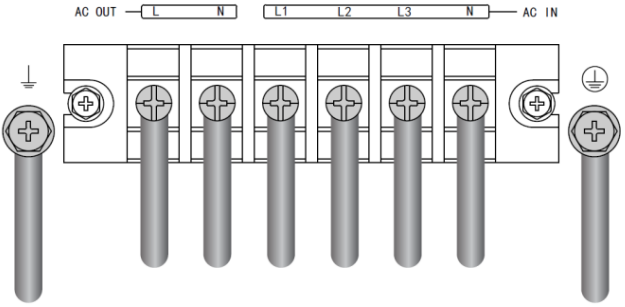

For cables well fixed, it is recommended to tie these cables to the convex of rear-panel.

3.4.3 Wiring with external battery module (EBM)

1. Be sure to disconnect the battery cable from the EBM before connecting the battery terminals of the UPS
2. Make sure the UPS is completely off before connecting or disconnecting the EBM.
3. Before connecting the EBM, make sure that the EBM specification is compatible with UPS configuration.
4. Do not reverse the polarity of the external battery.

- Connect with the configured EBM:

Connect EBM to UPS with 'Battery cable' and 'EBM detection cable'.

Tower EBM

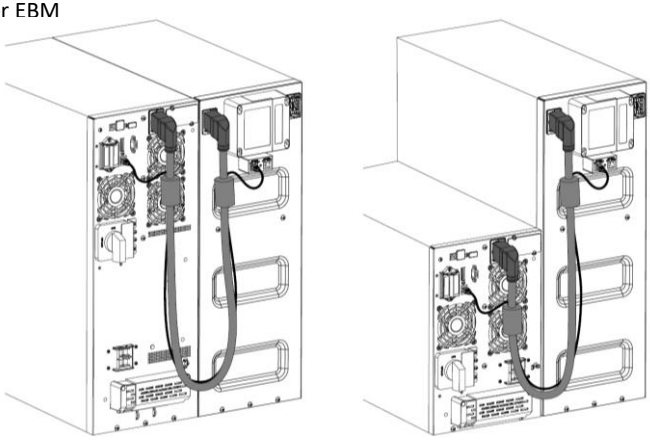

Note:

1. Extended runtime with up to 6 Extended Battery Modules (EBMs) per UPS.
2. Extend more than 2 EBMs, additional ground wires (10mm^2 cross-sectional area) are required.

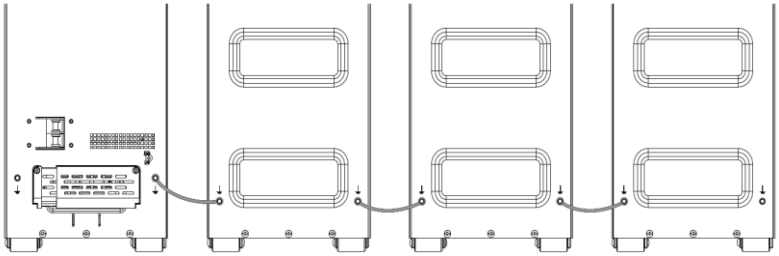

RT EBM

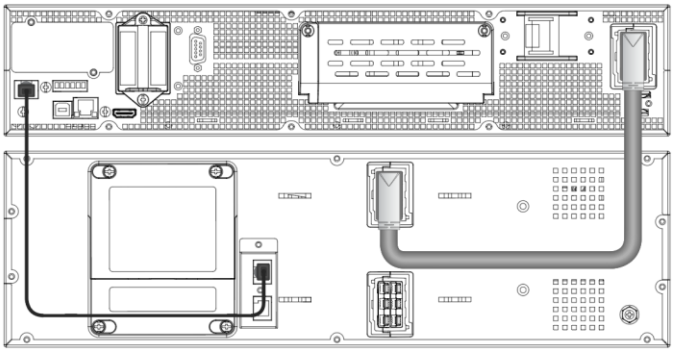

Note:

Extended runtime with up to 6 Extended Battery Modules(EBMs) per UPS.

- **Connection with user's own EBM:**

Connect EBM to UPS with 'Battery cable' (optional configured).

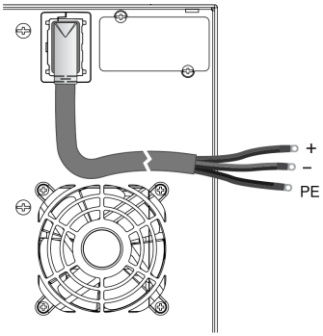

Tower model

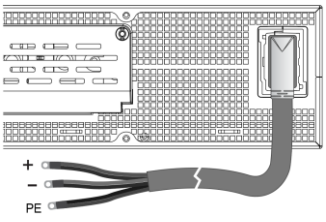

RT model

Note:

1.If additional battery cable needed for installation, it must follow cable specification and the maximum length of battery cable 10 meters for application.

3.4.4 Wiring with RT MBP (MBP source to R/T UPS only)

RT MBP is RT UPS's optional module, UPS can be used with the MBP to implement the maintenance bypass switching function to ensure that the output of the system is not stopped during the UPS maintenance.

See the User Manual of RT MBP for details.

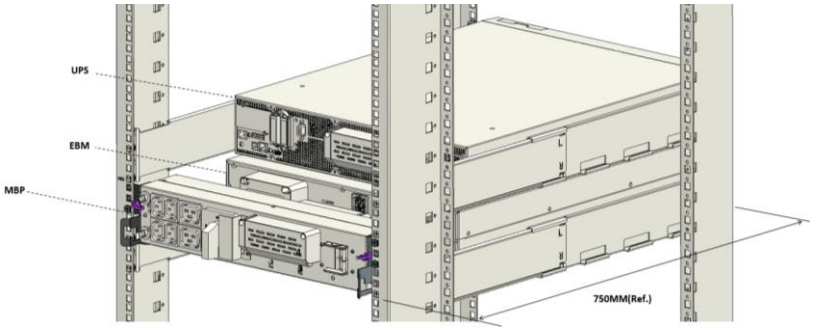

4. Parallel system Installation and Operation (Optional)

If your UPS is configured with parallel function, up to 3 UPSs can be connected in parallel to configure a sharing and redundant output power.

In parallel system, the mechanical installation for each module is same as the single system. Details please refer to Chapter 3.3.

Parallel system AC cable diagram:

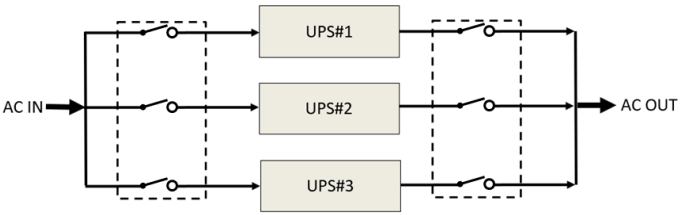

4.1 Wiring for AC Cable

1. Wiring length requirement:



When the distance between the load and the parallel UPS is less than 10 meters, the length difference between the input/output lines between the UPSs in the parallel system have to be less than 20%.

When the distance between the load and the parallel UPS is greater than 20 meters, the length difference between the input/output lines between the UPSs in the parallel system have to be less than 5%.

2. In the parallel system, common battery application is not supported. independent EBM connect to each UPS, please refer to chapter 3.4.3.
3. Professional installation is required, please set the parallel system in the restricted area!

Tower model parallel system

- **1-1 model**

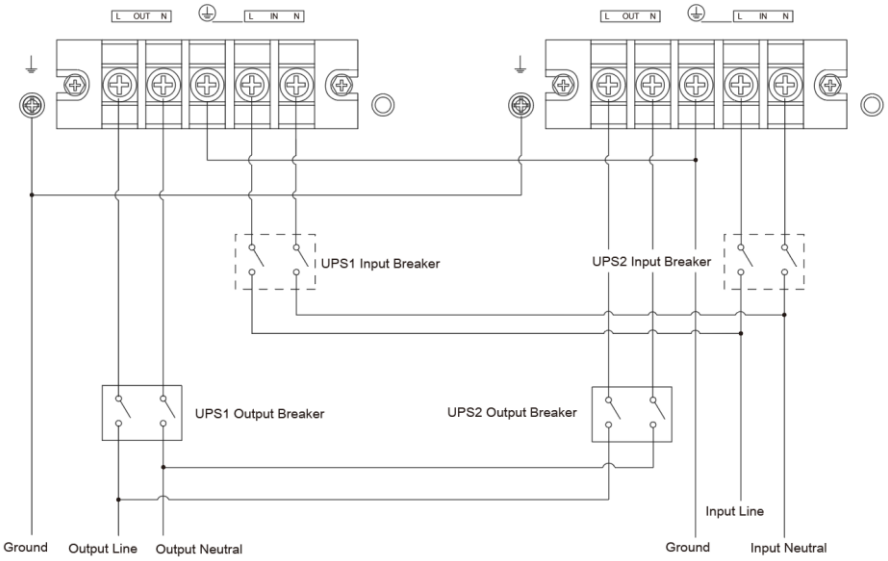

- **3-1 model**

1-1 mode

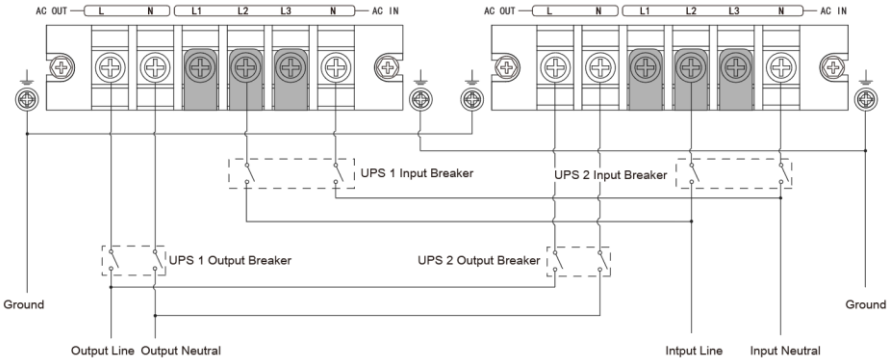

3-1 mode

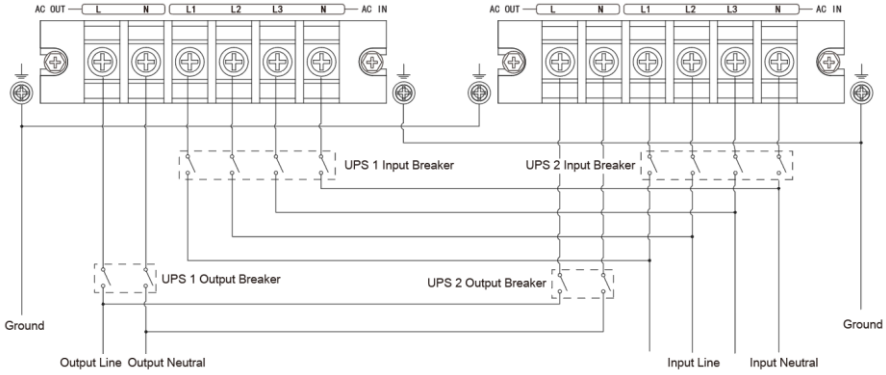

RT model parallel system

- **1-1 model**

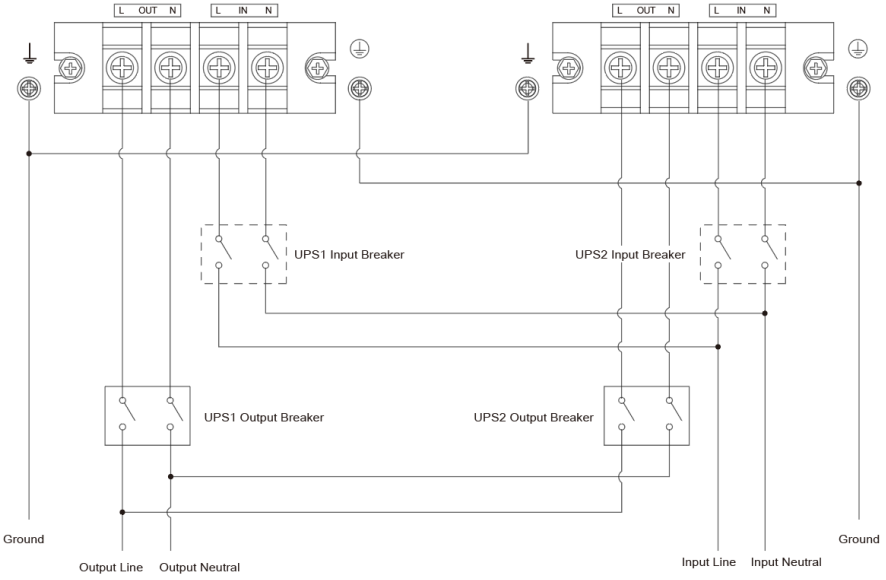

- **3-1 model**

1-1 mode

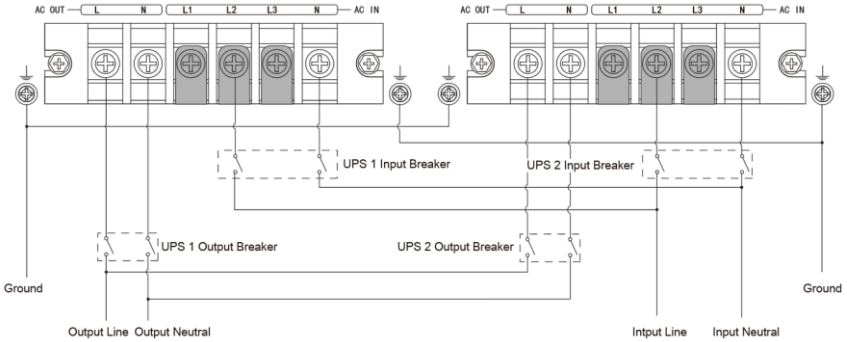

3-1 mode

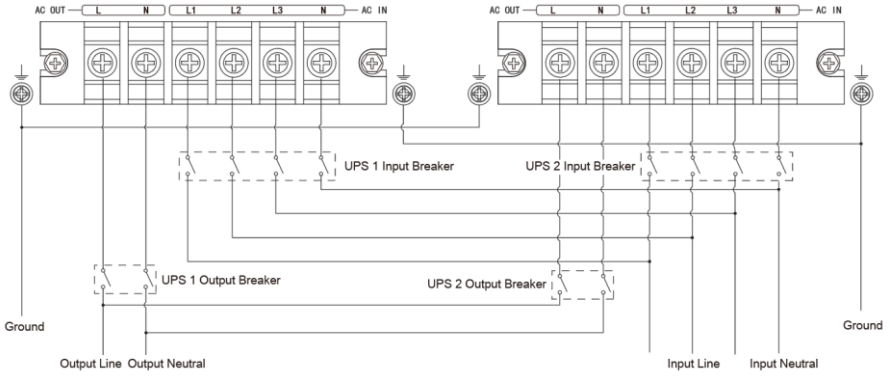

4.2 Wiring for parallel signal cable

Parallel signal cable connection diagram:

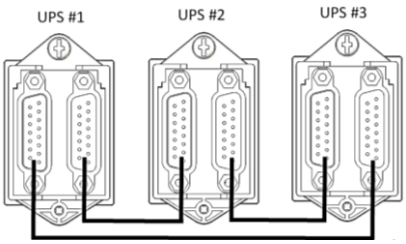

Remove the cover of 'parallel box', then connect each UPS one by one with 'parallel cable', make sure the cable is screwed to parallel port tightly.

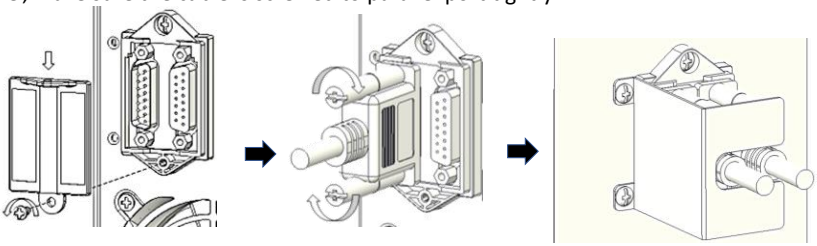

It is recommended to lock the 'parallel cable' (as above) for preventing the parallel ports suffering an unexpected pulling-force and causing the parallel system fault.

4.3 Parallel system Operation

1. Turn on the input breakers for the parallel UPS.
2. Pressing ⏻ button continuously for one UPS of the system, then the system will start to turn on and enter line mode.
3. Regulate the output voltage of each UPS separately, and check if the output voltage difference is less than 0,5V among the parallel system. If the difference is more than 0,5V, the UPS need to be regulated.
4. If the output voltage difference is OK, less than 0,5V, pressing ⏻ button continuously for one UPS of the system, then the system will turn off. Turn off the input breakers to let UPS shut down. Then switch on the output breakers for all the UPS.
5. Turn on the input breakers for the parallel UPS. Pressing ⏻ button continuously for one UPS of the system, then the system will start to turn on and enter line mode and the system will work normally in parallel.

5. Operation

5.1 LCD panel

The UPS has a five-button graphical LCD. It provides useful information about the UPS itself, load status, events, measurements and settings.

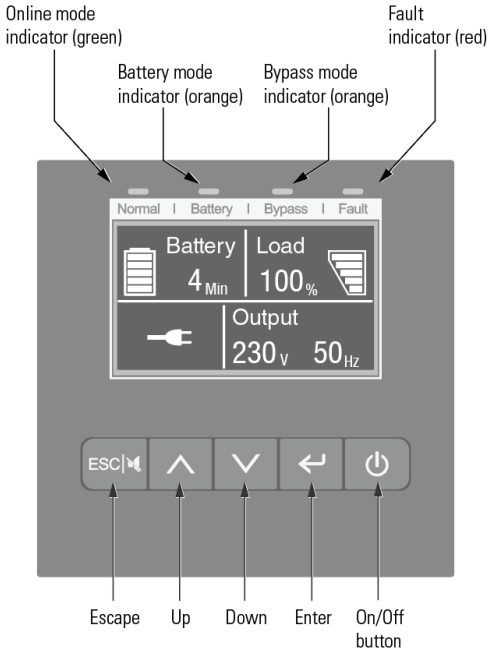

The LED:

Indicator	Status	Description
Normal Green	On	The UPS is operating normally on Online or on High Efficiency mode.
Battery Orange	On	The UPS is on Battery mode.
Bypass Orange	On	The UPS is on Bypass mode.
Fault Red	On	The UPS has an active alarm or fault. Please refer to section 8.1 Trouble shooting for more information

The buttons:

The button	Function	Illustration
	Power on	Press the Button for >100ms & < 1s can power on the UPS without utility input at the condition of battery connected, (see Chapter 5.6)
	Turn on	When the Unity is powered on, press the button for >3s can turn on the UPS (see Chapter 5.5)
	Turn off	Press the button > 4s can turn off the UPS
	Scroll up	Press to scroll up the menu option
	Scroll down	Press to scroll down the menu option
	Enter menu	Select/Confirm the current selection
	Exit the present menu	Press to exit present menu to Main menu or the higher-level menu without changing a setting
	Mute buzzer	Press the button to mute the buzzer temporarily, once new warning or fault is active, buzzer will work again

The Buzzer:

The buzzer	General Meaning
1 beep every 2 minutes	Load supplied on bypass
1 beep every 4 seconds	Load supplied on battery If battery low, beep every second
1 beep every second	General warning active
2 beeps every second	Overload warning
Continuous	Fault active

Back Light:

After 10 minutes of inactivity, the LCD backlight will automatically dim. Press any button to restore the screen.

5.2 LCD description

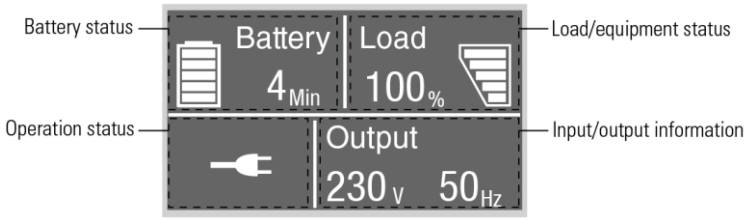

Operation status	Cause	Description
	Standby mode	The UPS is without output.
	Online mode	The UPS is operating normally and protecting the equipment.
 1 beep every 4 seconds	Battery mode	An utility failure has occurred, and the UPS is powering the equipment with battery. Prepare your equipment for shutdown.
 1 beep every 1 seconds	Battery mode with battery low	As above but autonomy time is low. This warning is approximate, and the actual time to shutdown may vary significantly. Shutdown your equipment
	High Efficiency mode	Load on mains, once the mains are loss or abnormal, the UPS would transfer from Line mode to Battery mode and the load is supplied continuously.
	Converter mode	The UPS would free run with fixed output frequency (50Hz or 60Hz). The output maximum power and maximum charging current have to be derated to 60% in converter mode.
	Bypass mode	Overload or fault has occurred, or a command has been received, and the UPS is in Bypass mode.
	Battery test	UPS is executing a battery test
	Battery fail	The UPS detects bad battery or battery disconnected

	Overload	Load to high, some unnecessary loads should be switch off to reduce the load.
	Fault mode	Some fatal problems happened.
	Parallel mode	UPS is working in parallel mode

5.3 Display functions

Use the two middle buttons (and) to scroll through the menu structure. Press the Enter ( ) button to select an option. Press the ESC ( ) button to cancel or return to the previous menu.

When starting the UPS, the display is in the default UPS status summary screen.

Main menu	Submenu	Display information or Menu function
UPS status		UPS mode, IoT status, date/time, battery status, parallel information and current alarms
Event log		Displays the events and faults stored
Measurements		[Load] W VA A P%, [Input L1/Output] V Hz, [Input L2/Input L3] V Hz(if available, 3/1 model), [Battery] % min V EBM, [DC Bus] V, [Temperature] ℃
Control	Load segment	Load segment enable or disable
	Start battery test (single mode) Single battery test (parallel mode)	Starts a manual battery test in stand-alone mode Or starts a single battery test in parallel mode
	Parallel UPS battery test (parallel mode)	Starts a manual battery test in parallel mode
	Single UPS turn off (parallel mode)	Stop this machine to exit parallel connection
	Reset fault state	Clear active fault
	Reset event list	Clear events and faults
	Reset com card / Reset IoT	Reset IoT and Modbus TCP function inside UPS
	Restore factory settings	Restore to default factory settings
Settings		Refer to User settings
Identification		[Model name], [Serial number], [firmware version], [comm card firmware], [IP/MAC address]

5.4 User settings

Submenu	Available settings	Default settings
Password	Can be changed by user	4732
Language	English, Italian, Frenҫh, Deutsch, Spanish, Русский, Polski, 简体中文 (Russian, Polish, Chinese)	English
User password	[Enabled, ****], [Disabled]	Enabled
Audible alarms	[Enabled], [Disabled]	Enabled
Output voltage	[220V], [230V], [240V]	[230V]
Output frequency	[Autosensing], [converter 50Hz, 60Hz]	Autosensing
High efficiency Mode	[Disabled], [Enabled]	Disabled
Auto bypass	[Disabled], [Enabled]	Enabled
Start/Restart	Cold start : [Disabled], [Enabled] Auto restart : [Disabled], [Enabled]	Enabled Enabled
Site wiring fault	[Enabled], [Disabled]	Enabled
Overload pre-alarm	[50%~105%]	105%
External battery	[Auto detection], [Manual EBM: 0~6] [Manual Ah: 0~300Ah]	Auto detection 0 EBM 0 Ah
Charger current	1-4A for 6-10k 2-12A for 6-10K-KS	1,4A for 6K 2A for 10K 4A for 6-10K-KS
Dry in signal	[Disabled], [Remote on], [Remote off], [Forced bypass]	Disabled
Dry out signal	[Load powered], [On bat], [Low bat], [Bat open], [Bypass], [UPS OK]	Bypass
Ambient temperature alarm	[Enabled], [Disabled]	Enabled
Battery remaining time	[Enabled], [Disabled]	Enabled
Date and time	dd/mm/yyyy hh:mm	01/01/2020 00:00
LCD contrast	[0-100%]	50%
Modbus TCP	[Enabled], [Disabled]	Disabled
IoT Enable	[Yes], [No]	No



Note: if the utility power is IT system, the site wiring fault function have to be disabled.

5.5 Starting the UPS with utility

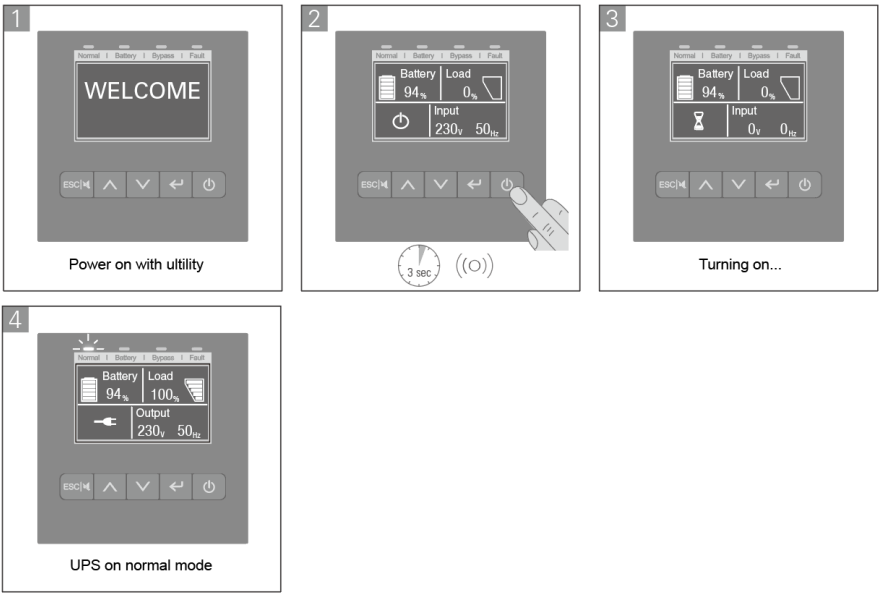

5.6 Starting the UPS on Battery

Before using this feature, the UPS must have been powered by utility power with output enabled at least once.

Battery start can be disabled. See the "Cold start" setting in "Start/Restart".

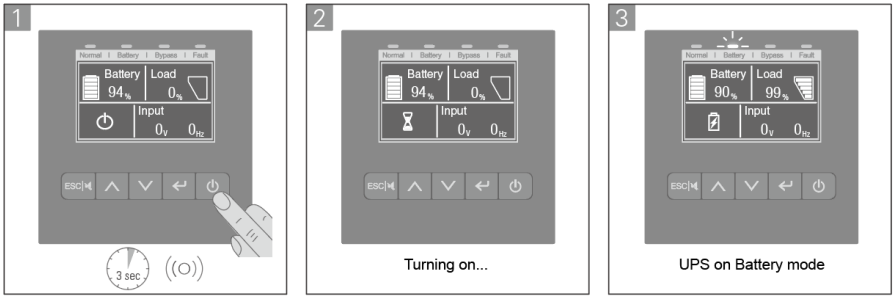

5.7 UPS Shutdown

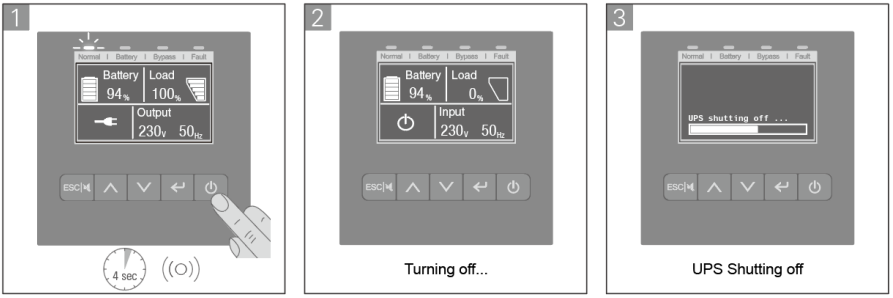

6. Communication

6.1 RS232 and USB

1. Communication cable to the serial or USB port on the computer.

2. Connect the other end of the communication cable to the RS232 or USB communication port on the UPS.

6.2 UPS remote control functions

- **Remote Power Off (RPO/EPO)**
  When RPO is activated, UPS will cut off output immediately, and continues to alarm.

RPO	Comments
Connector type	16 AWG Maximum wires
External breaker specification	60 V DC/30 V AC 20 mA max

Reset:

1. Check the RPO connector status;
2. Clear fault state through LCD.

- **Dry in**

Dry in function can be configured (see Settings > Dry in).

Dry in	Comments
Connector type	16 AWG Maximum wires
External breaker specification	60 V DC/30 V AC 20 mA max

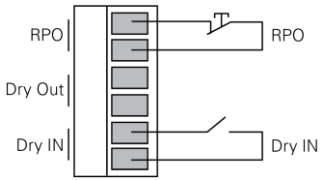

- **Dry out**

Dry out is the relay out, dry out function can be configured (see Settings > Dry out).

Dry out	Comments
Connector type	16 AWG Maximum wires
Inner Relay specification	24Vdc/1A

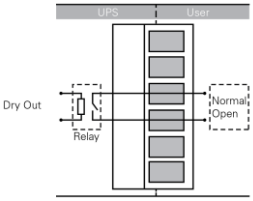

6.3 IoT APP “GTEC Explore”

Built-in ethernet port and port enable market-leading and easy-to-use IoT solutions for:

- GTEC Explore mobile app which allows you to remote monitor UPS(s) and keep informed about critical UPS event always.
- Remote report UPS faults and status (contact with your service for detail) from APP or registered APP account (Email address).
- Automatic UPS and battery warranty alert from APP or registered APP account (Email address).

IoT Connection

- **Wired network connection**

1. Connect UPS to router or switch with network cable.

- Please use CAT6 shielded network cable.
- Make sure your IT settings can access the public network and Microsoft Azure Cloud.

2. Enable the IoT function in LCD (see Settings -> IoT)
3. Search the “GTEC Explore” from Google Play store or Apple APP store, downloading and installing.
4. Open the app, register an account, log in, follow the instructions of the app.
5. Tap ⊕ on the upper right corner, scan the SN barcode on UPS label to add device.

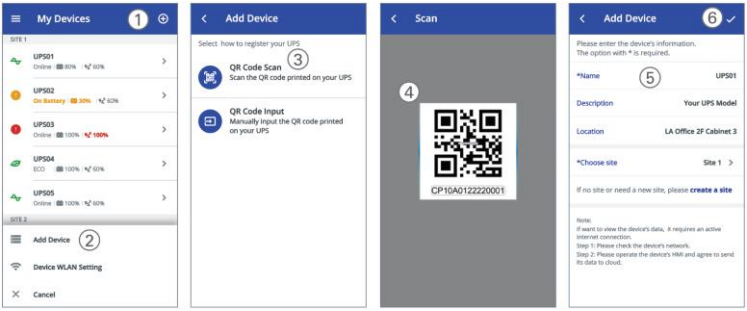

For more detail information and Q&A about the IoT and APP, please refer to the HELP menu in the app.

- **Wireless network connection**

The wireless module is optional, please contact your local distributor for details.

6.4 Modbus TCP

Built-in ethernet port offers Modbus TCP feature to facilitate remote monitoring of the UPS into your own software. Contact with your service for protocol details.

6.5 Intelligent Card (optional)

Intelligent Card allow the UPS to communicate with different types of devices in variety of networking environments. The UPS could use the following connectivity cards, please contact your local distributor for details

- **SNMP-NMC Card** - Ideal monitoring solution enables user to monitor and control the status of UPS on web browser via internet
- **CMC card -** provides connection to Modbus protocol with standard RS485 signal.
- **AS400N card** - Provides voltage-free dry-contact signals for programmable controller and management system
- **EMP -** Supports temperature and humidity sensors for remote environment monitoring, should work with SNMP-NMC Card

6.6 UPS Management Software

6.6.1 WinPower

WinPower provides user-friendly interface to monitor and control your UPS. This unique software provides safely auto shutdown for multi-computer systems while power failure. With this software, users can monitor and control any UPS on the same LAN no matter how far from the UPSs.

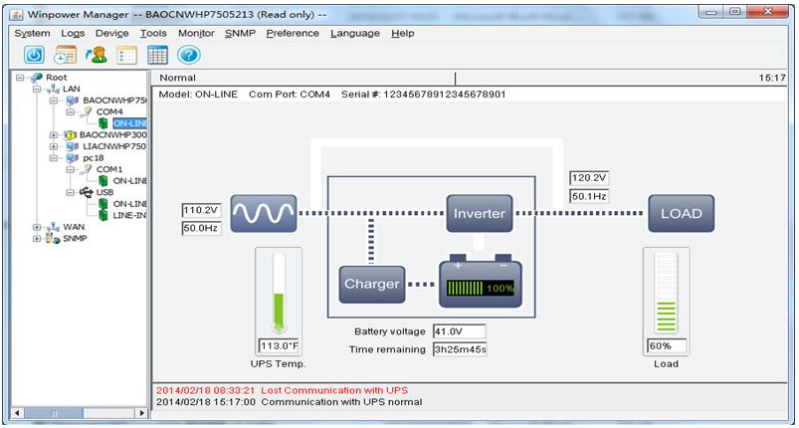

Installation procedure:

1. Go to the website: www.ups-software-download.com
2. Choose the operation system you need and follow the instruction described on the website to download the software.
3. After downloading all required files from the internet, enter the serial No: **511C1-01220-0100-478DF2A** to install the software.

When you finish installation, restart your computer, the WinPower software will appear as a green plug icon located in the system tray, near the clock.

6.6.2 GTEC Explore APP

GTEC Explore is a mobile app which allows you to centralized monitoring UPS(s) connected to cloud. Please download it from Google Play store or Apple APP store. Please refer to the chapter 6.3 for IoT connection.

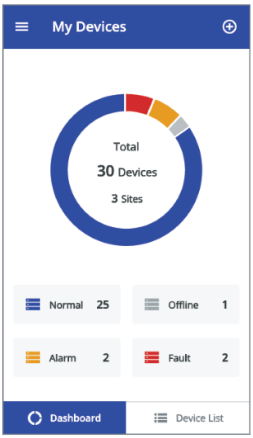

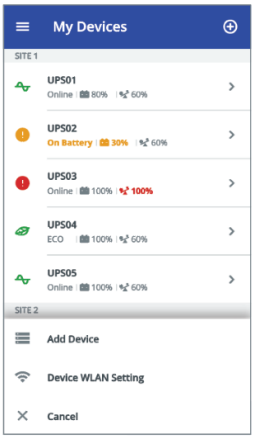

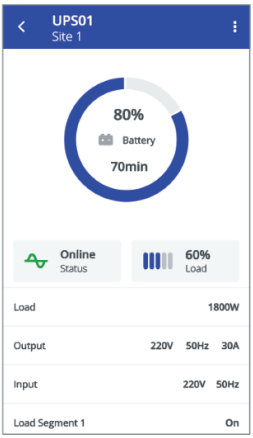

7. UPS maintenance

7.1 Equipment care

For the best preventive maintenance, keep the area around the equipment clean and dust free. If the atmosphere is very dusty, clean the outside of the system with a vacuum cleaner.

For full battery life, keep the equipment at an ambient temperature of 25°C (77°F) or less.

The batteries are rated for a 3-5 year service life. The length of service life varies, depending on the frequency of usage and ambient temperature. Batteries used beyond specification will often have severely reduced runtimes. Replace batteries at least every 4 years to keep units running at peak efficiency.

Scheduled maintenance: ask your dealer, According the UPS working condition several pcb shall be replace every 5 years to maintain UPS reliability.

7.2 Transporting the UPS

Please transport the UPS only in the original packaging. If the UPS requires any type of transportation, verify that the UPS is disconnected and turned off.

7.3 Storing the equipment

If you store the equipment for a long period, recharge the battery every 6 months by connecting the UPS to utility power. Recommends that the batteries charge for 24 hours after long-term storage.

If batteries were never recharged over 6 months, they can be damaged, do not use them. Contact your service representative.

7.4 Recycle

Contact your local recycling or hazardous waste center for information on proper disposal of the used equipment.



Do not dispose of the batteries in the fire, which may cause battery explosion. The batteries must be rightly disposed according to local regulation.

Do not open or destroy the batteries. Escaping electrolyte can cause injury to the skin and eyes. It may be toxic.



Do not discard the UPS or the UPS batteries in the trash.

This product contains sealed lead acid batteries and must be disposed as it's explained in this manual. For more information, contact your local recycling/reuse or hazardous waste center.



The crossed-out wheeled bin symbol indicates that waste electrical and electronic equipment should not be discarded together with unseparated household waste but must be collected separately. The product should be handed in for recycling in accordance with the local environmental regulations for waste disposal.

By separating waste electrical and electronic equipment, you will help reduce the volume of waste sent for incineration or land-fills and minimize any potential negative impact on human health and environment.

8. Troubleshooting

The UPS is designed for durable, automatic operation and also alert you whenever potential operating problems may occur. Usually the alarms shown by the control panel do not mean that the output power is affected. Instead, they are preventive alarms intended to alert the user.

- Events are silent status information that are recorded into the Event log. Example = "Battery charging".
- Alarms are recorded into the Event log and displayed on the LCD status screen with the logo blinking. Some alarms may be announced by a beep every 1 second. Example = "Battery low".
- Faults are announced by a continuous beep and red LED, recorded into the Event log. Example = Out. short circuit.
  Use the following troubleshooting chart to determine the UPS alarm condition.

8.1 Typical alarms and faults

To check the Event log:

1. By pressing ↵ on the menu of “Event log”.
2. Scroll through the listed events or faults.
3. The following table describes typical conditions.

WARNING		
Problem Displayed	**Possible cause**	**Remedy**
On Maintain Bypass	Maintain bypass switch cover is open	Check the maintain bypass switch status
Site Wiring alarm	Phase and neutral conductor at input of UPS system are reversed	Reverse mains power wiring.
No battery	Battery is not present or battery pack is not connected correctly	Do the battery test to confirm. Check the battery bank is properly connected to the UPS. Check the battery breaker is turn on and fuse OK.
Battery low	Battery voltage is low	When audible alarm sounding every second, battery is almost empty.
End battery life	The battery has reached the end of its life	Consult dealer to replace the battery
Power overload	Power requirements exceed the UPS capacity	Check the loads and remove some noncritical loads. Check if some loads are failed
Overload pre-alarm	The load exceeds the preset value	Check the loads or reset the pre-alarm value

WARNING		
Problem Displayed	**Possible cause**	**Remedy**
Fan Lock	Fan abnormal	Check if the fan is running normally or fan detection cable disconnected
UPS temp. alarm	Inside temperature of UPS is too high	Check the ventilation of UPS and the ambient temperature.
Amb. temp. alarm	The ambient temperature is too high	Check the environment ventilation
Imminent shutoff	Insufficient battery backup time	Protect load equipment in time
FAULT		
Problem Displayed	**Possible cause**	**Remedy**
Inverter overload	Overload	Check the loads and remove some noncritical loads. Check if some loads are failed.
Bypass overload	Overload	Check the loads and remove some noncritical loads. Check if some loads are failed.
Out. short circuit	abnormally low impedance placed on its output and considers it a short circuit	Remove all the loads. Turn off the UPS. Check if UPS output and loads is short circuit. Ensure short circuit is removed before turning on again.
UPS temp. fault	Inside temperature of UPS is too high	Check the ventilation of UPS and the ambient temperature.
DC bus + or - too high	UPS internal fault, the + or -DC BUS voltage is too high	Consult dealer.
DC bus + or - too low	UPS internal fault, the + or -DC BUS voltage is too low	Consult dealer.
DC bus unbalanced	UPS internal fault, the voltage difference between DC Bus+ and DC bus- is too large	Consult dealer.
DC bus short circ.	UPS internal fault	Consult dealer.
Max inverter volt	UPS internal fault, the inverter voltage is too high	Consult dealer.
Min inverter volt	UPS internal fault, the inverter voltage is too low	Consult dealer.

ELSE CASES		
Problem Displayed	**Possible cause**	**Remedy**
No indication, no warning tone even though system is connected to mains power supply	No input voltage	Check the building wiring and input cable. Check if the input breaker is closed.
Green LED is not on even though the power supply is available	Inverter not switched on	Press On-Switch to turn on UPS.
Emergency supply period shorter than nominal value	Batteries are not fully charged / batteries defect	Charge the batteries for at least 12 hours and then check capacity.

8.2 Silencing the alarm

Press the ESC (Escape) button 3s on the front panel display to silence the alarm. Check the alarm condition and perform the applicable action to resolve the condition. If the alarm status changes or press the ESC button 3s on the front panel display, the alarm beeps again, overriding the previous alarm silencing.

9. Specifications

9.1 UPS Block Diagram

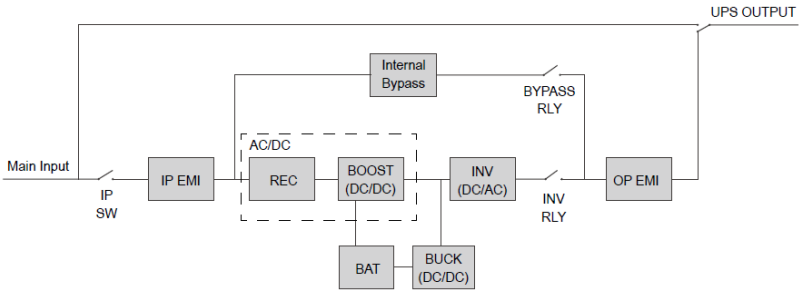

9.2 UPS Specification

Models		6K	6K-KS	10K	10K-KS	10K 3-1	10K-KS 3-1
Rated power (1)		6KVA/ 6KW	6KVA/ 6KW	10KVA/ 10KW	10KVA/ 10KW	10KVA/ 10KW	10KVA/ 10KW
Rated frequency		50/60Hz					
Input	Voltage range (Phase to Neutral)	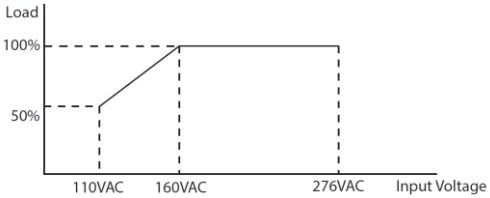 110Vac-276Vac					
	Rated voltage Phase to Neutral	220/230/240VAC					
	Rated current (1phase) with 16pcs battery (2)	34A	42A	53A	61A	53A	61A
	Rated current (3phase) with 16pcs battery (2)	----	----	----	----	L1 48A L2/L3 18A	L1 51A L2/L3 21A
	Rated current (1phase) with 20pcs battery (2)	35A	45A	54A	65A	54A	65A
Input	Rated current (3phase) with 20pcs battery (2)	----	----	----	----	L1 49A L2/L3 19A	L1 52A L2/L3 22A

Models		6K	6K-KS	10K	10K-KS	10K 3-1	10K-KS 3-1
	Frequency	⩽60% rated load: 40-70Hz					
		> 60% rated load: 45-55Hz (50Hz system)/54-66Hz (60Hz system)					
Charging current (1)	Range	1~4A	2~12A	1~4A	2~12A	1~4A	2~12A
	Default	1,4A	4A	2A	4A	2A	4A
Output	Rated voltage (Phase to N)	220/230/240VAC					
	Overload on normal mode	105%-125% Load, 10 minutes transfer to Bypass; 125%-150% Load, 30 seconds transfer to Bypass; >150% Load, 0,5 seconds transfer to Bypass					
	Short-circuit current on normal mode	54A for 200ms max	54A for 200ms max	113A for 200ms max	113A for 200ms max	113A for 200ms max	113A for 200ms max
Transfer Time Line<->Battery		0ms					
Transfer Time INV<->Bypass		0ms					
Battery							
Battery Voltage		192/240VDC selectable					
Battery Number		16/20PCS selectable (6K Tower & all 10K std=20pcs, 6K-RT std=16)					
Environment							
Ambient temperature		0°C ~ 50°C (Derating 50% above 40°C)					
Relative humidity		0 ~ 95%(no condensing)					
Operating altitude		<3000m (Derating use above 1km, the load should de-rating 1% every up 100m)					
Storage temperature (with battery)		-15°C ~ 40°C					
Storage temperature (without battery)		-25°C ~ 55°C					
Standard for CE + UKCA							
Safety		IEC/EN 62040-1 / BS EN IEC 62040-1					
EMC		IEC/EN 62040-2 / BS EN IEC 62040-2					
Performance		IEC/EN 62040-3 / BS EN IEC 62040-3					

(1) In CVCF (Frequency converter) mode, UPS needs to be de-rated to 60% capacity (rated output power and maximum charging current).

(2) @ 220VAC input phase voltage, rated output power and maximum charging.

614-40079-Rev04B